MAGNETO AND STARTER

SERVICE TOOLS

Description	Part Number	Page
CRANKSHAFT PROTECTOR	529 036 213	7
FLUKE 115 MULTIMETER	529 035 868	5, 11
FLYWHEEL PULLER	420 976 235	7

SERVICE PRODUCTS

Description	Part Number	Page
LOCTITE 243 (BLUE)	293 800 060	7–8
LOCTITE 648 (GREEN)	413 711 400	10
LOCTITE CHISEL (GASKET REMOVER)	413 708 500	3
PULLEY FLANGE CLEANER	413 711 809	8–9
TRIPLE-GUARD GREASE	296 000 329	12

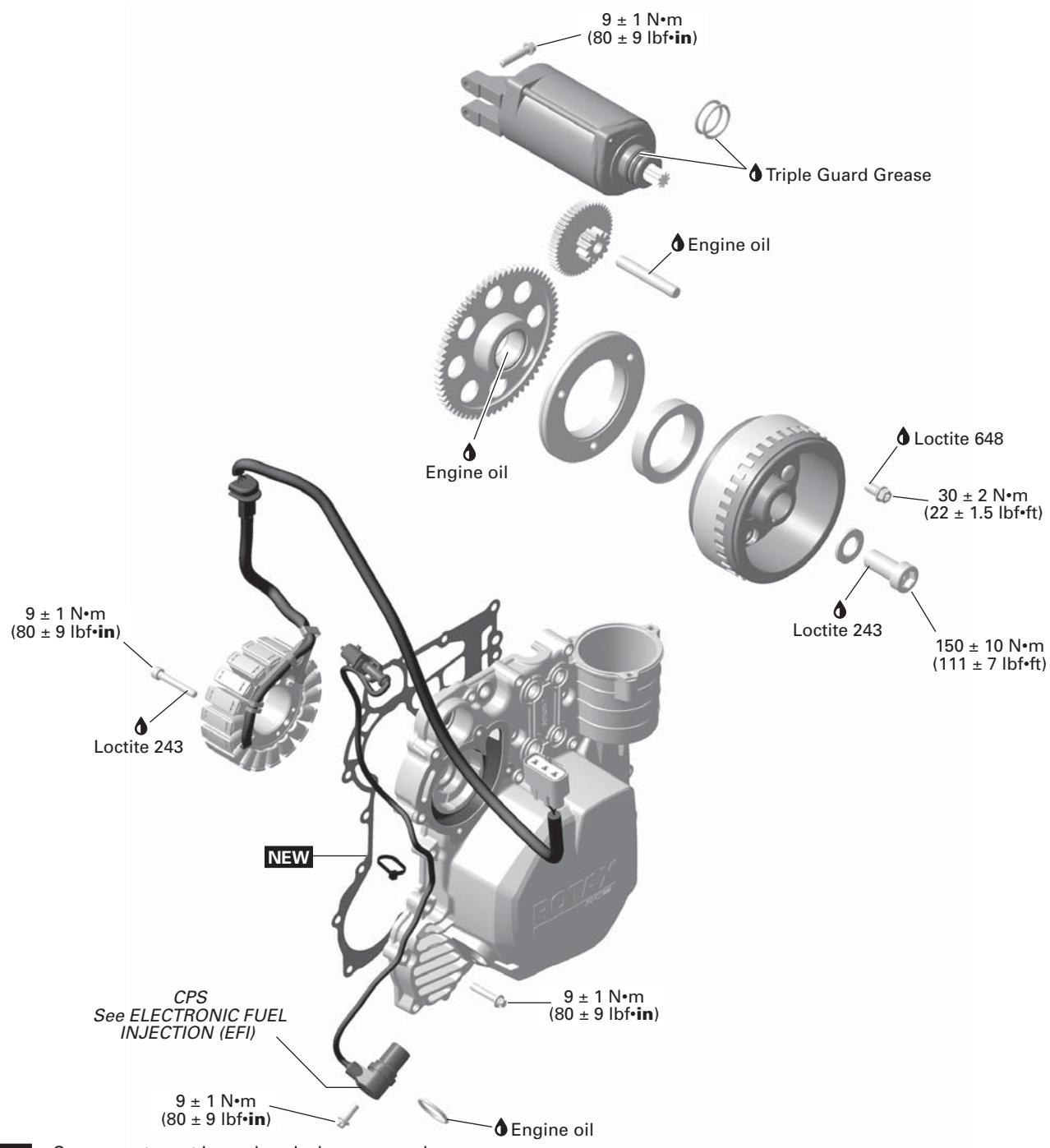

NEW = Component must be replaced when removed.

smr2014-018-001_a

GENERAL

⚠ WARNING

Always disconnect BLACK (-) battery cable first and reconnect last.

During assembly/installation, use the torque values and service products as in the exploded view.

Clean threads before applying a threadlocker. Refer to *SELF-LOCKING FASTENERS* and *LOCTITE APPLICATION* at the beginning of this manual for complete procedure.

⚠ WARNING

Torque wrench tightening specifications must strictly be adhered to.
Locking devices when removed (ex: locking tabs, cotter pin, etc.) must be replaced.

NOTICE **Hoses, cables or locking ties removed during a procedure must be reinstalled as per factory standards.**

PROCEDURES

MAGNETO COVER

Magneto Cover Access

1. Remove central body. Refer to *BODY*.
2. Remove battery. Refer to *CHARGING SYSTEM*.
3. Remove air intake silence. Refer to *AIR INTAKE SYSTEM*.
4. Remove fuel tank. Refer to *FUEL TANK AND FUEL PUMP*.
5. Remove central foam (under fuel tank).

Magneto Cover Removal

1. Refer to *PERIODIC MAINTENANCE PROCEDURES* and:
   – Drain coolant
   – Drain engine oil.
2. Refer to *COOLING SYSTEM* and remove:
   – Water pump housing
   – Thermostat housing.
3. Refer to *LUBRICATION SYSTEM* subsection and remove:
   – Oil pressure regulator
   – Oil cooler.
4. Remove the CPS.

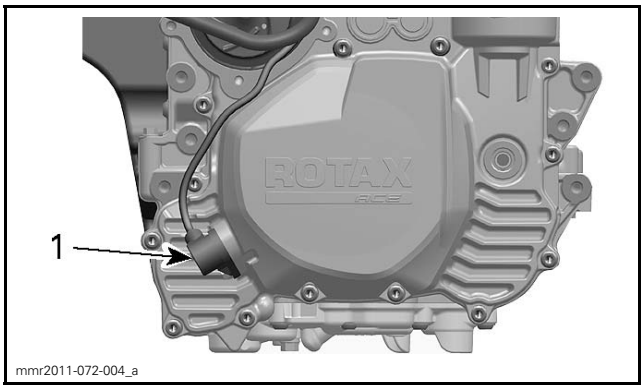

1. CPS

5. Remove magneto cover retaining screws.

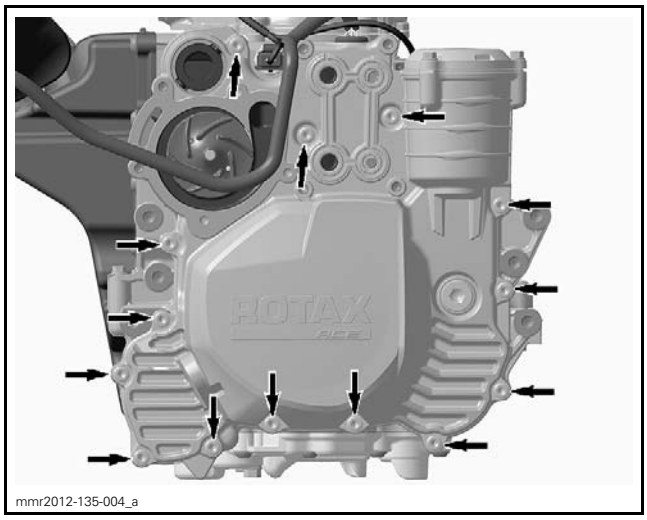

MAGNETO COVER SCREWS

6. Place an oil pan under magneto area to catch remaining oil.
7. Pull magneto cover off.

Magneto Cover Inspection

Check magneto cover for cracks or other damage. Replace if necessary.

Magneto Cover Installation

1. Clean magneto cover.

MAGNETO COVER CLEANING	
Service product	LOCTITE CHISEL (GASKET REMOVER) (P/N 413 708 500)

2. Install a NEW magneto cover gasket.
3. Ensure starter drive gear pin is in place.
4. Apply engine oil on starter drive gear pin.

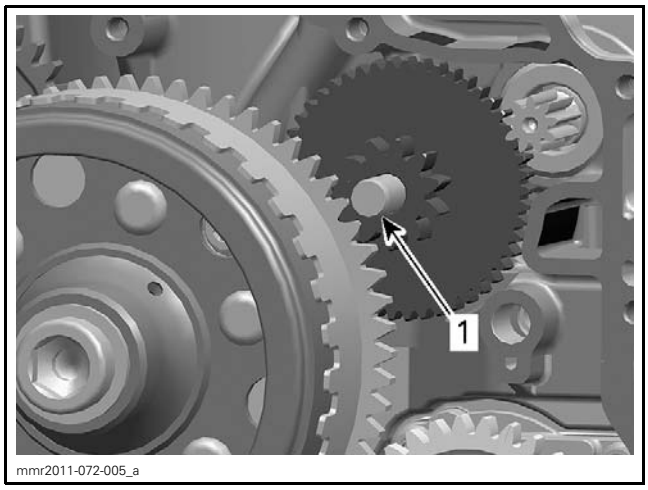

1. Starter drive gear pin

5. Apply engine oil on water pump shaft.

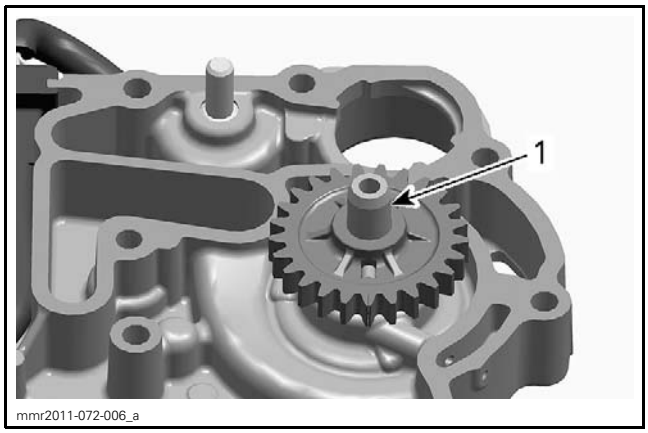

1. Water pump shaft - apply engine oil

NOTICE **Make sure that the stator cable harness is embedded into the channel. The part of the harness that is out of the channel must be tight, otherwise it might chafe or jam.**

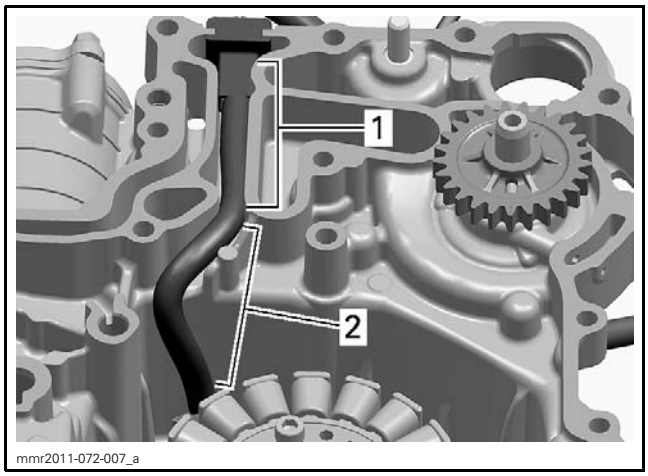

1. Embedded in that area
2. Tight in this area

6. Carefully install magneto cover.

⚠ CAUTION **Magnetic force between magneto flywheel and stator is very high. Avoid finger contusions.**

7. Tighten magneto cover screws according to the following sequence.

TIGHTENING TORQUE	
Magneto cover screws	9 N•m ± 1 N•m (80 lbf•**in** ± 9 lbf•**in**)

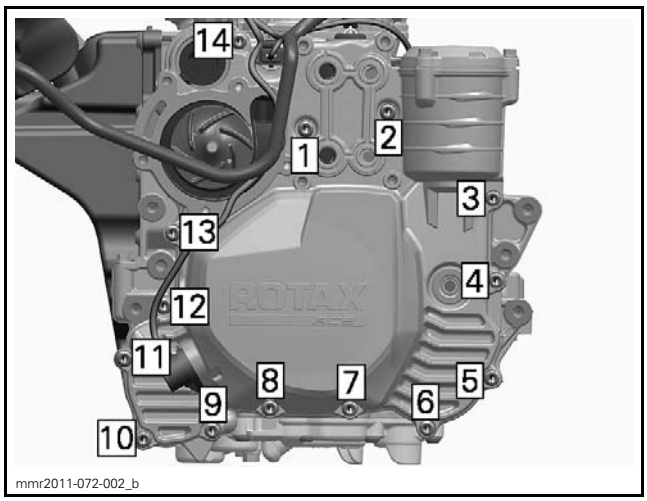

TIGHTENING SEQUENCE

8. Install all other removed parts.

STATOR

Stator Connector Access

Remove central body. Refer to *BODY*.

Follow image sequence.

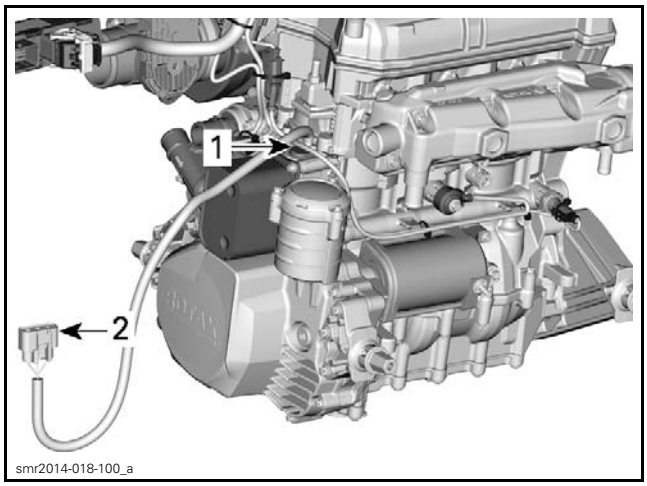

STATOR CONNECTOR ACCESS
1. Stator harness at magneto cover
2. Stator connector

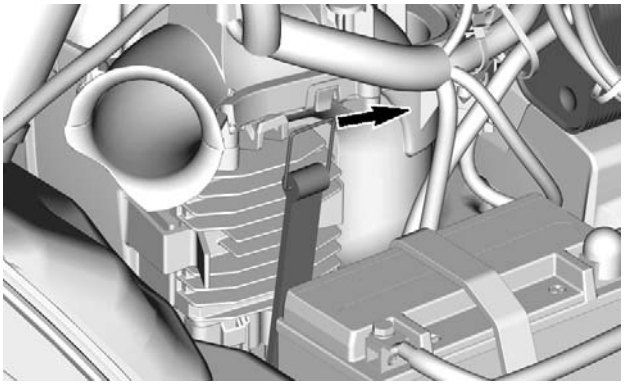

smr2014-018-101_a

smr2014-018-102_a

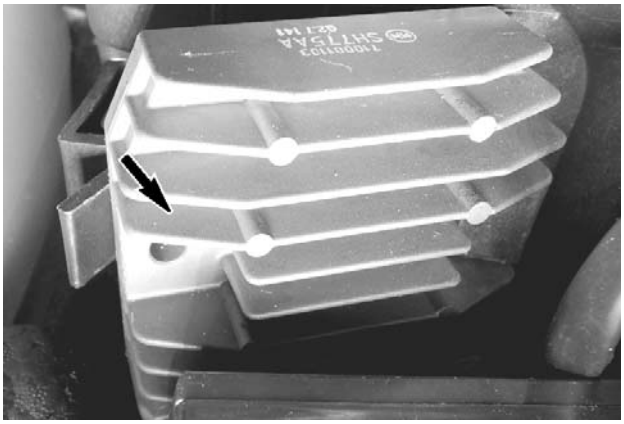

smr2014-018-103_a

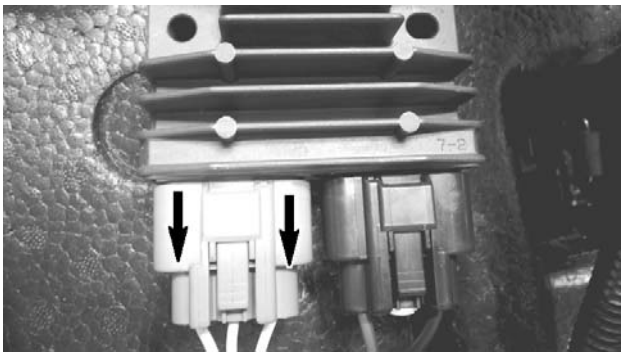

smr2014-018-104_a

Stator Continuity Test

1. Disconnect battery.
2. Disconnect the stator connector from voltage regulator, refer to *STATOR CONNECTOR ACCESS* in this subsection.
3. Set the multimeter to Ω.

REQUIRED TOOL	
FLUKE 115 MULTIMETER (P/N 529 035 868)	

4. Probe each pair of YELLOW wires by touching (NOT inserting) terminals lock tabs as shown.

NOTICE **Never insert a multimeter probe into a terminal as it would ruin the terminal.**

vbs2012-014-001

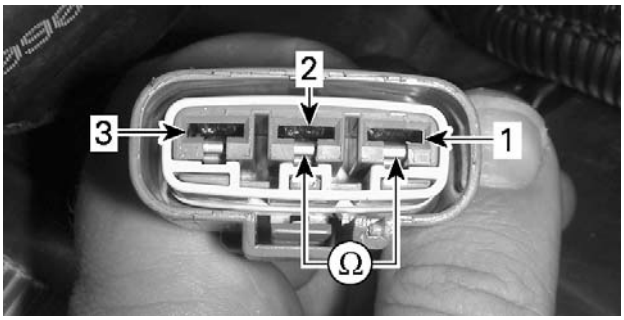

mmr2009-113-036_a

1. *Pin #1*
2. *Pin #2*
3. *Pin #3*

5. Read resistance as per following table.

STATOR CONTINUITY TEST	
YELLOW WIRES (EACH PAIR)	RESISTANCE @ 20°C (68°F)
Pins 1 and 2	0.1 - 1 Ω
Pins 1 and 3	
Pins 2 and 3	

If any resistance reading is not as specified, the stator or the wiring (including connector) is open and needs to be repaired or replaced.

If resistance is good, perform the stator insulation test.

Stator Insulation Test

1. Connect multimeter between any YELLOW wire and chassis ground.

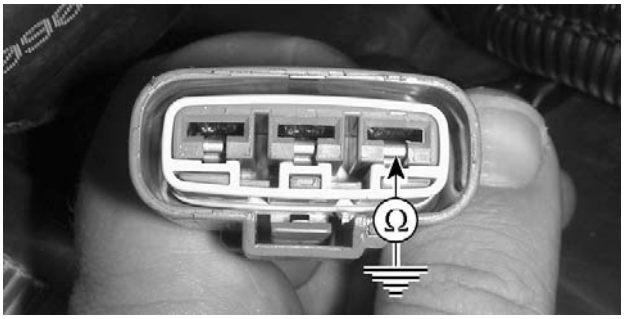

mmr2009-113-036_b

2. Read resistance.

STATOR INSULATION TEST	
PROBE POSITIONS	RESISTANCE @ 20°C (68°F)
Any YELLOW wire and chassis ground	Infinity (OL)

If any resistance reading is not as specified, the stator or the wiring is shorted to ground and needs to be repaired or replaced.

If the insulation test is good, perform the output voltage test.

Stator Output Voltage Test

1. With the stator connector unplugs from the voltage regulator/rectifier, start engine and let it reach its operating temperature.
2. Set multimeter to Vac scale.
3. With engine idling, connect multimeter between each pair of YELLOW wires.

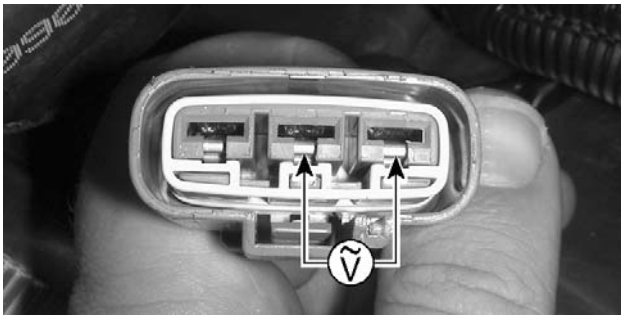

mmr2009-113-036_c

4. Read voltage.

STATOR OUTPUT VOLTAGE TEST		
TEST ENGINE SPEED	TERMINAL	VOLTAGE
Idle speed	1 and 2	± 25 Vac
	1 and 3	
	2 and 3	

If any voltage reading is significantly lower than specification, replace the stator.

Stator Removal

1. Remove the *MAGNETO COVER*, see procedure in this subsection.
2. Remove stator retaining screws.

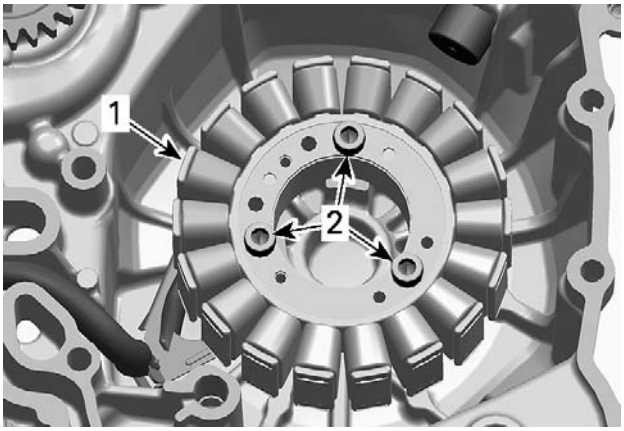

mmr2011-072-008_a

1. Stator
2. Stator retaining screws

3. Remove stator.

Stator Inspection

Check stator windings and insulation for cracks and other damages. If damaged replace it.

Check if stator wires are brittle, hard or otherwise damaged.

Stator Installation

1. Ensure that the stator cable is underneath the cable holder during installation of the stator.

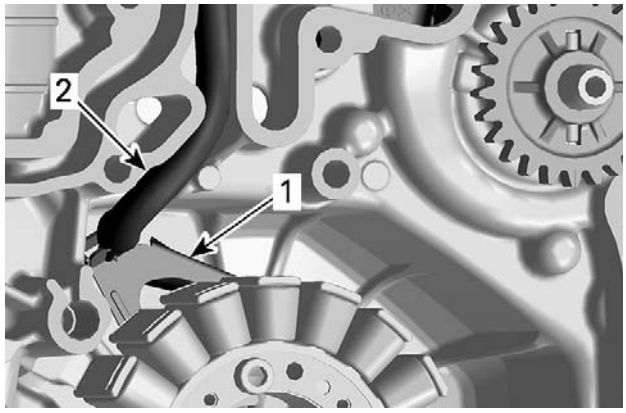

mmr2011-072-009_a

1. *Cable holder*
2. *Stator cable*

2. Install stator retaining screws and tighten to the specified torque.

TIGHTENING TORQUE	
Service product	LOCTITE 243 (BLUE) (P/N 293 800 060)
Stator retaining screws	9 N•m ± 1 N•m (80 lbf•**in** ± 9 lbf•**in**)

3. Reinstall *MAGNETO COVER*, see procedure in this subsection.

ROTOR

Rotor Removal

1. Remove the *MAGNETO COVER*, see procedure in this subsection.
2. Lock crankshaft. Refer to *CYLINDER BLOCK* subsection.
3. Remove rotor retaining screw and lock washer.

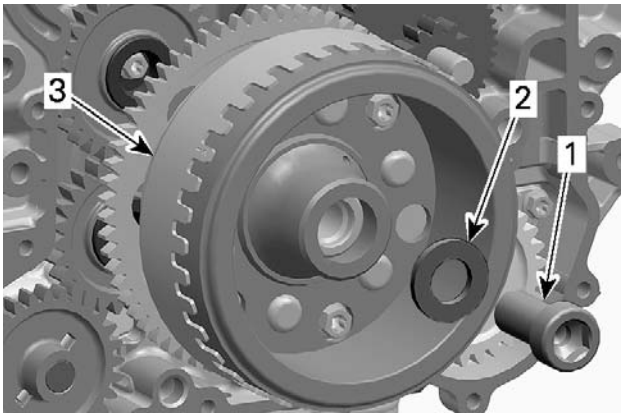

mmr2011-072-010_a

1. *Retaining screw*
2. *Lock washer*
3. *Rotor*

4. Remove rotor.

REQUIRED TOOL	
CRANKSHAFT PROTECTOR (P/N 529 036 213)	
FLYWHEEL PULLER (P/N 420 976 235)	

NOTE: Apply some grease on the crankshaft protector surface to ease puller operation.

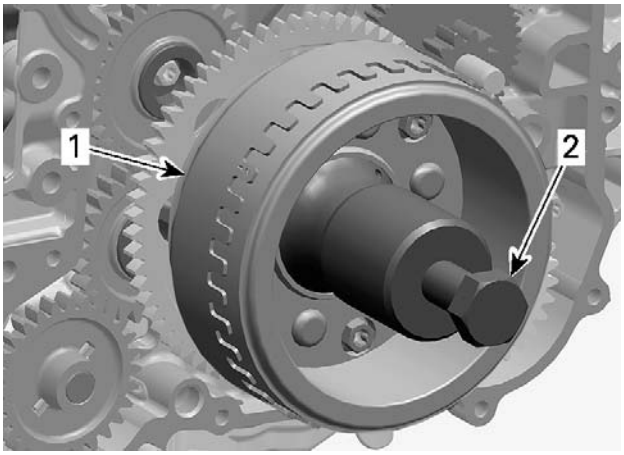

mmr2011-072-023_a

1. *Rotor*
2. *Flywheel puller screw*

Rotor Inspection

Check the inner side of the rotor for scratches or other damage.

Check keyway for wear or damages.

Check if trigger wheel teeth are bent or otherwise damaged.

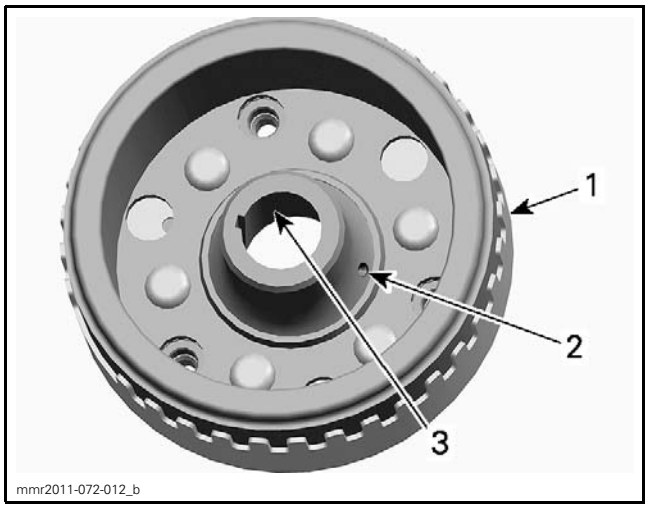

1. Rotor with trigger wheel
2. Oil passage in magneto hub
3. Rotor taper

Check woodruff key and keyway on the crankshaft for wear or damages.

Replace parts as necessary.

Rotor Installation

Installation is the reverse of the removal procedure. However, pay attention to the following.

1. Blow the oil passage in the magneto hub using compressed air. Check if it is clogged.
2. Using PULLEY FLANGE CLEANER (P/N 413 711 809), clean:
   – The oil passage
   – The crankshaft thread
   – The crankshaft taper
   – The rotor taper.

NOTICE **Taper on crankshaft and rotor must be free of grease.**

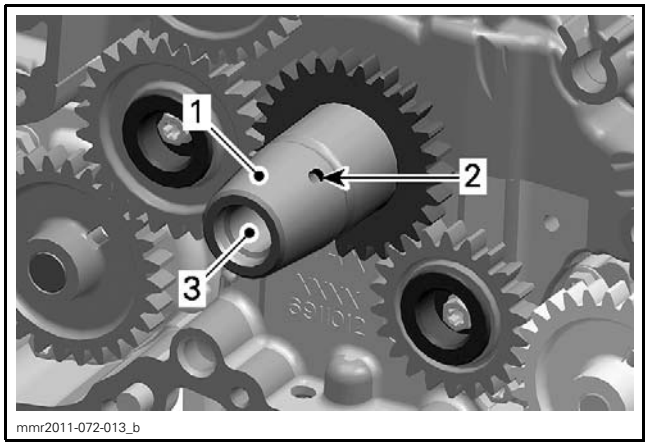

1. Crankshaft taper
2. Oil passage
3. Thread

3. Apply oil on sprag clutch and needle bearing.

4. Install sprag clutch gear onto the rotor.

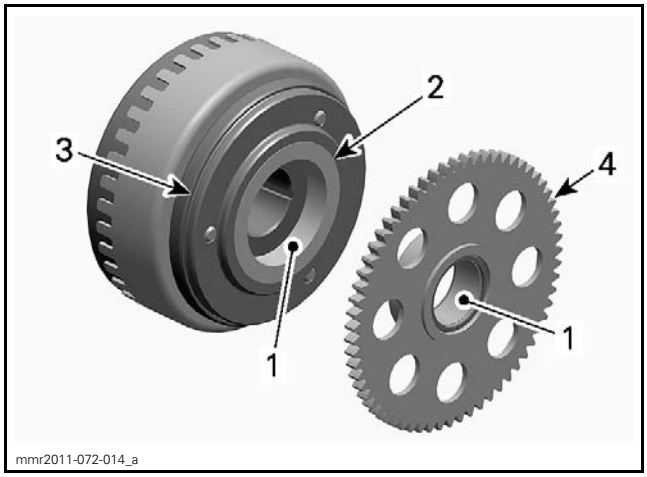

1. Apply engine oil here
2. Sprag clutch
3. Sprag clutch housing
4. Sprag clutch gear

5. Slide rotor along with the sprag clutch gear onto the crankshaft. The woodruff key and keyway must be aligned.
6. Rotate sprag clutch gear counterclockwise to align with starter double gear.

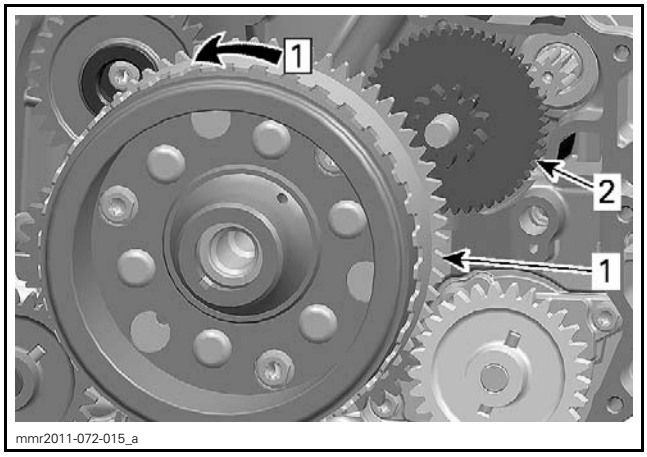

Step 1: Rotate to align teeth

1. Sprag clutch gear
2. Starter double gear

7. Install washer and retaining screw.
8. Tighten to the specified torque.

ROTOR RETAINING SCREW	
Service product	LOCTITE 243 (BLUE) (P/N 293 800 060)
Tightening torque	150 N•m ± 10 N•m (111 lbf•ft ± 7 lbf•ft)

SPRAG CLUTCH

Sprag Clutch Removal

1. Remove the *MAGNETO COVER*, see procedure in this subsection.
2. Lock crankshaft. Refer to *CYLINDER BLOCK* subsection.
3. Loosen and remove sprag clutch housing screws.

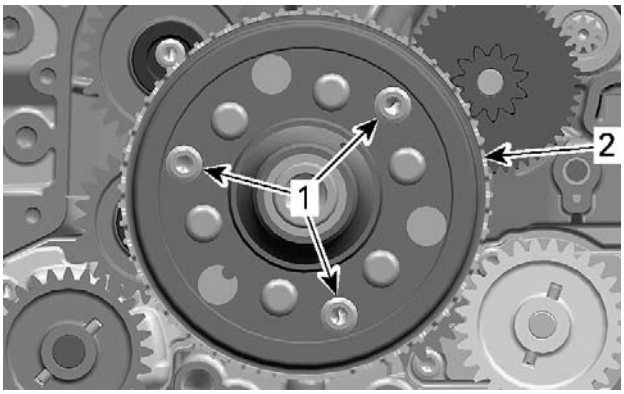

1. Sprag clutch housing screws
2. Rotor

4. Remove *ROTOR*, see procedure in this subsection.
5. Remove sprag clutch housing.
6. Remove sprag clutch from sprag clutch housing.

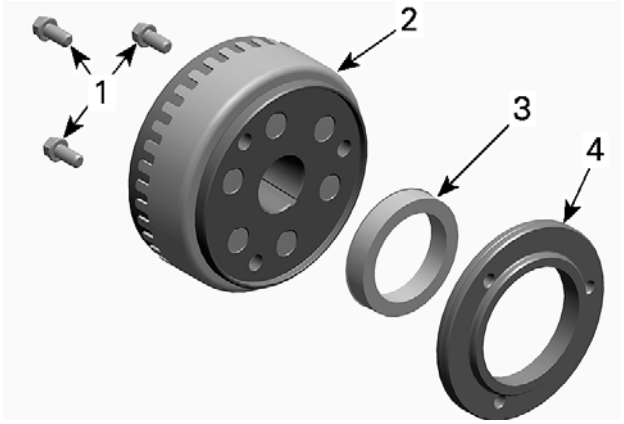

1. Sprag clutch housing screws
2. Rotor
3. Sprag clutch
4. Sprag clutch housing

Sprag Clutch Inspection

Inspect sprag clutch and sprag clutch housing for wear and damage.

Check the collar of the sprag clutch gear, refer to *SPRAG CLUTCH GEAR*.

Rotate sprag clutch gear clockwise. Gear must rotate freely.

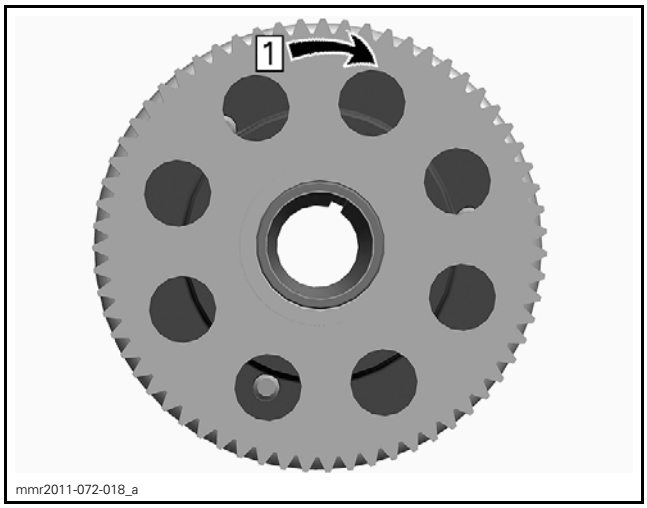

Step 1: Free

Rotate sprag clutch gear counterclockwise. Gear must lock.

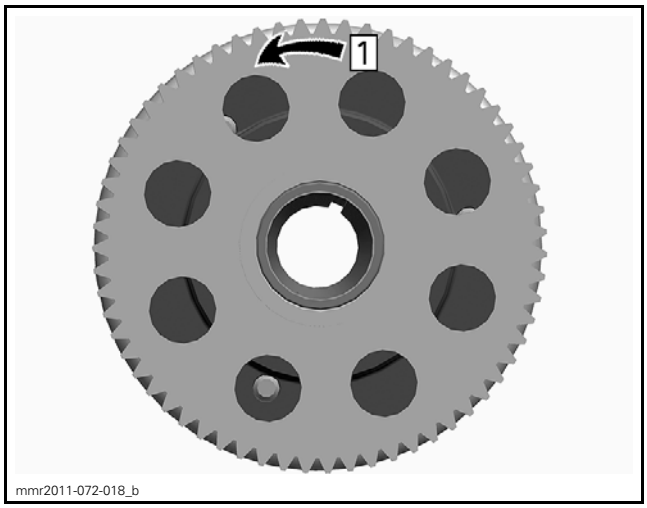

Step 1: Lock

Sprag Clutch Installation

1. Clean sprag clutch housing with a parts cleaner.

NOTICE **Threads of sprag clutch housing must be free of any lubricants.**

SPRAG CLUTCH HOUSING	
Service product	PULLEY FLANGE CLEANER (P/N 413 711 809)

2. Apply thread locker on threads of sprag clutch housing screws.

SPRAG CLUTCH HOUSING SCREWS	
Service product	LOCTITE 648 (GREEN) (P/N 413 711 400)

3. Loosely install screws.
4. Apply engine oil on sprag clutch and sprag clutch gear needle bearing.

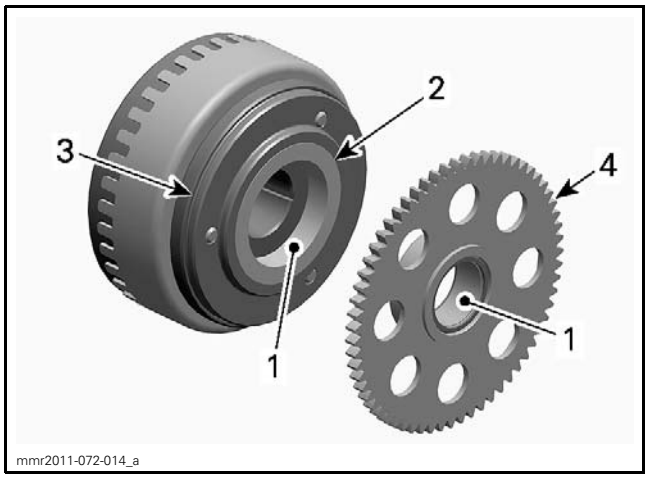

1. *Apply engine oil here*
2. *Sprag clutch*
3. *Sprag clutch housing*
4. *Sprag clutch gear*

5. Install *ROTOR*, see procedure in this subsection.
6. Tighten sprag clutch housing screws to the specified torque.

TIGHTENING TORQUE	
Sprag clutch housing screws	30 N•m ± 2 N•m (22 lbf•ft ± 1 lbf•ft)

7. Install all other removed parts.

SPRAG CLUTCH GEAR

Sprag Clutch Gear Removal

1. Remove rotor and sprag clutch gear together. Refer to *ROTOR* in this subsection.
2. Pull sprag clutch gear out of the rotor.

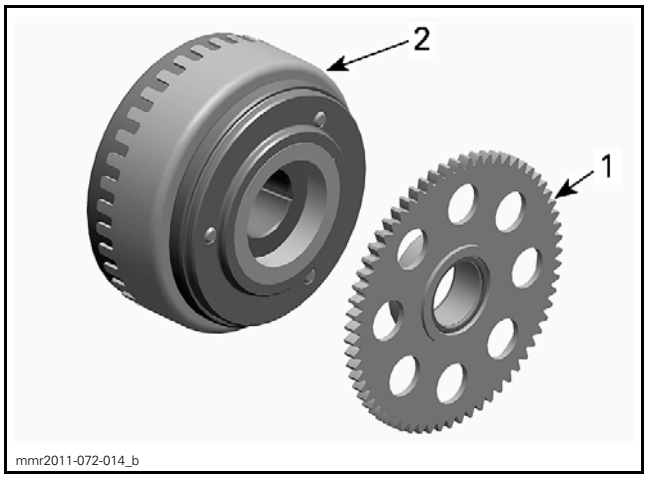

1. *Sprag clutch gear*
2. *Rotor*

Sprag Clutch Gear Inspection

Inspect gear, especially teeth and sprag clutch collar for wear and other damage.

Check needle bearing for wear and pittings.

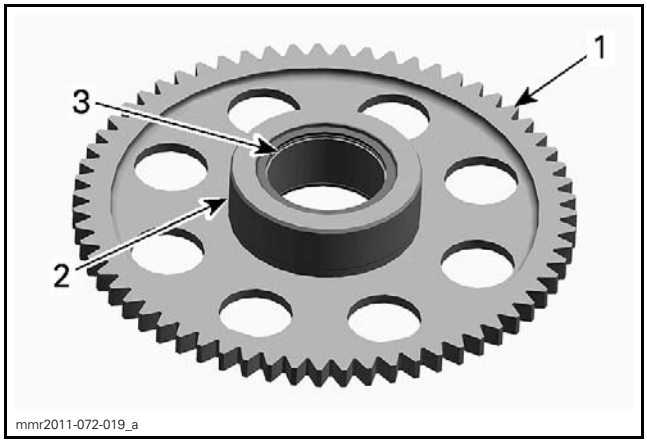

1. *Teeth*
2. *Collar*
3. *Needle bearing*

Replace sprag clutch gear if necessary.

Sprag Clutch Gear Installation

The installation is the reverse of the removal procedure. However, pay attention to the following.

NOTE: Apply engine oil on needle bearing and collar of sprag clutch gear.

STARTER DRIVE GEARS

The starter drive gears are located on the engine MAG side behind the magneto cover.

Starter Drive Gear Removal

1. Remove *MAGNETO COVER*, see procedure in this subsection.

2. Remove location pin and starter double gear.

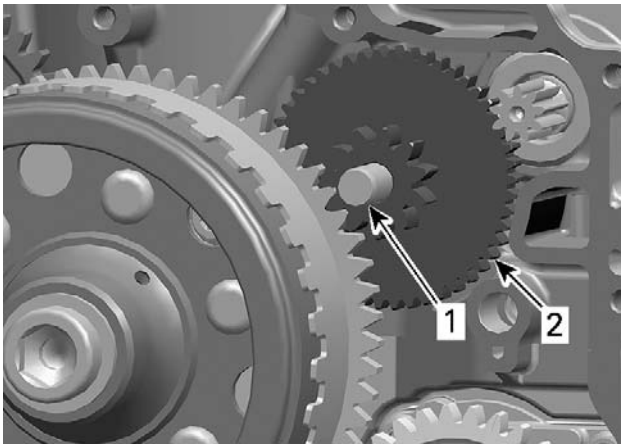

mmr2011-072-005_c

1. *Location pin*
2. *Starter double gear*

Starter Drive Gear Inspection

Inspect starter drive gears and location pin for wear and damage.

Replace parts if necessary.

Starter Drive Gear Installation

The installation is the reverse of the removal procedure. However, pay attention to the following.

Apply engine oil on the location pin.

STARTER

Starter Operation Test

Before carrying out any starter test, make sure:

– Battery is fully charged and in good condition.
– Cable connections at battery, starter and solenoid are tight.
– Cables are in good condition.

1. Disconnect the negative battery cable.
2. Using booster cables and a fully charged battery or a power pack, carefully supply current directly to the starter.
   2.1 Connect the negative booster cable or power pack cable to a good ground such as an engine support.
   2.2 Temporarily touch the starter positive terminal.

⚠ WARNING

Sparks can occur when connecting jumper cables. To avoid fire hazard, be sure that no flammable liquids or fuel vapors are in the test area.

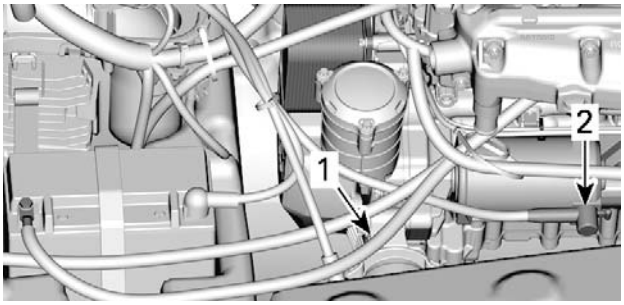

smr2014-018-105_a

1. *Engine support*
2. *Starter positive terminal*

If starter turns at normal speed, test the starting circuit. Refer to *STARTING SYSTEM* subsection.

If starter turns slowly, carry out the *STARTER VOLTAGE DROP TEST (AT BATTERY)*.

If starter does not turn, replace starter.

Starter Voltage Drop Test (at Battery)

NOTE: This test will confirm if starter draws too much current. Battery must be fully charged and in good condition.

1. Set the multimeter to Vdc.

REQUIRED TOOL	
FLUKE 115 MULTIMETER (P/N 529 035 868)	

2. Probe the battery posts.
3. Crank engine in drowned mode. Refer to *ENGINE MANAGEMENT SYSTEM*.
4. Read voltage while cranking.

NOTE: Battery voltage will drop approximately 2 Vdc and fluctuate with starter cranking load.

If the result is close to battery voltage, the starter is in good condition.

If the result is below battery voltage (- 2 Vdc and more), the starter may be defective.

Starter Access

Remove central body. Refer to *BODY*.

Starter Removal

1. Disconnect the BLACK (–) cable from the battery.
2. Remove the starter cable from starter.
3. Remove starter retaining screws.

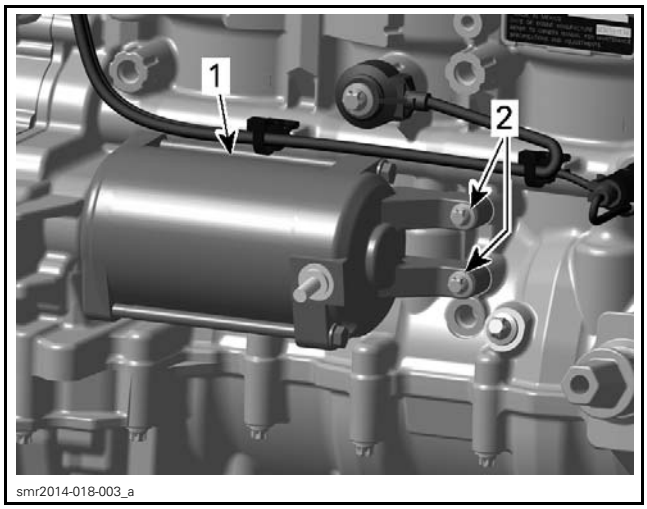

1. *Starter*
2. *Starter retaining screws*

4. Pull starter off the cylinder block.

Starter Installation

1. Ensure starter and engine mating surfaces are free of debris.

NOTICE **Serious problems may arise if the starter is not properly aligned.**

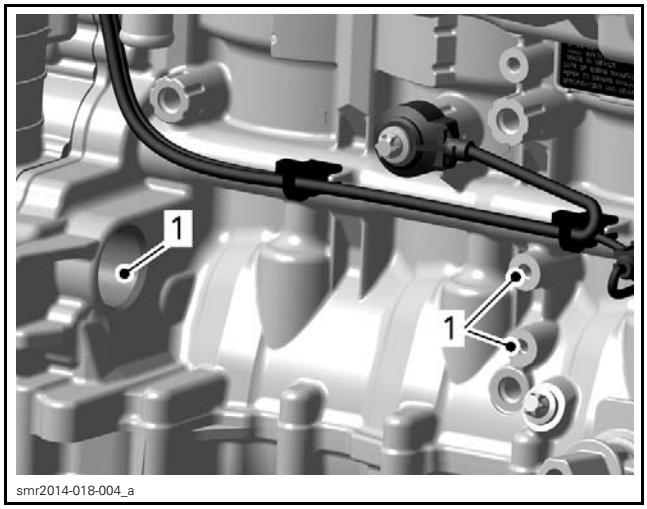

1. *Clean mating surfaces*

2. Lubricate on starter end and starter O-rings before installation.

STARTER END +O-RINGS	
Service product	TRIPLE-GUARD GREASE (P/N 296 000 329)

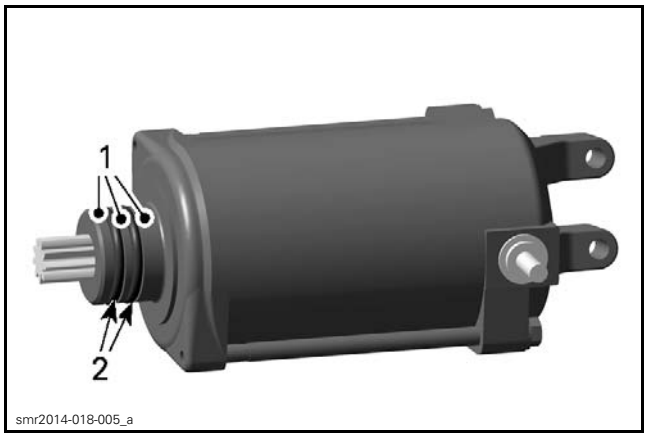

1. *Lubricate starter end*
2. *Lubricate starter O-rings*

3. Insert starter gear into engine.
4. Install starter screws and tighten to the specified torque.

TIGHTENING TORQUE	
Starter screws	9 N•m ± 1 N•m (80 lbf•**in** ± 9 lbf•**in**)

5. Connect the starter cable to the starter and tighten nut to the specified torque.

TIGHTENING TORQUE	
Starter cable nut	7 N•m ± 1 N•m (62 lbf•**in** ± 9 lbf•**in**)

6. Install all other removed parts.
7. Reconnect BLACK (–) cable on battery post.
8. Test for proper starter operation.